RN-111B

www.rovingnetworks.com

DS-RN111B_V1 4/20/2009

"WiFly" 802.11B Module

Features

- Ultra-low power module with 40mA average RX, 120ma TX burst current usage.
- Embedded stacks with TCP/UDP/IP, sockets, no host or processor stacks required.
- ICMP, Telnet, TFTP, DHCP, FTP, UDP Time server clients.
- Flash memory for user code, API for user applications.
- FTP client "over the air" firmware upgrade.
- Simple ACSII command interface, over local UART and remote from TCP/IP client.
- Sustained data rates (each direction) of >200 kbps.
- Security: WEP128, WPA-PSK, and WPA2-PSK (TKIP and AES) supported.
- Real-time clock for datalogging/timestamping.
- Up to 500Kbytes of Flash memory storage for data logs.
- World wide approvals/certifications (FCC, IC, CE).
- RoHS compliant

Applications

- Wireless thermostats
- RS232/RS485 cable replacement
- Remote equipment monitoring
- Scanners, GPS and measurement systems
- Industrial sensor and control

Description

The WiFly module is a stand alone, embedded 802.11b device. Because of its small form factor and extremely low power consumption, the RN-111B is perfect for mobile wireless applications such as asset monitoring, GPS tracking and portable devices. The Wifly modules include an on board TCP/IP stack and networking application programs such as telnet and ftp. The hardware requires only four connections (PWR, TX, RX, GND) to create a simple wireless data connection. The WiFly module is programmed via a straight forward ASCI command. Once is setup it can automatically associated and authenticate with a network, connect to remote hosts, and reliably transmit data, making your application accessible worldwide.

Block Diagram

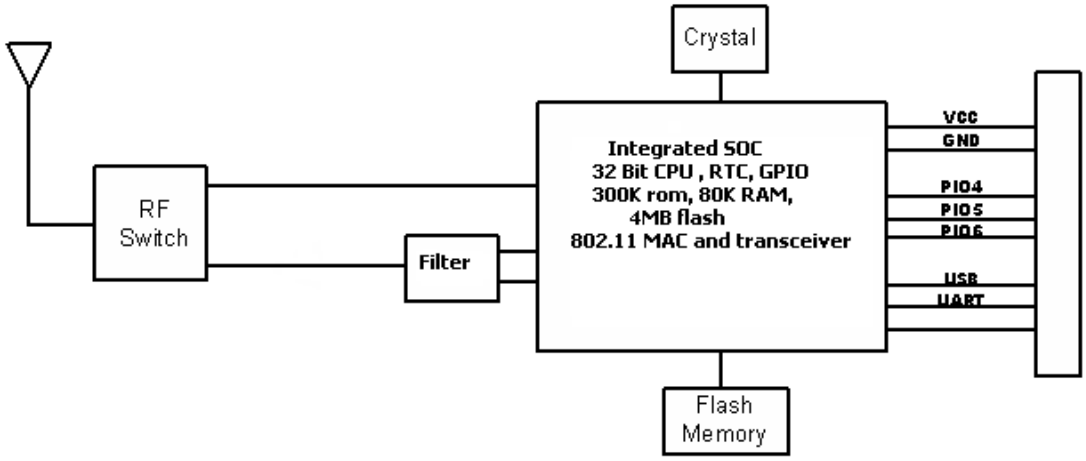

Overview

- Accepts Wide range DC power input , (3.0V - to 16Vdc). Can power from single battery cell.
- 801.11b compliant radio. CHIP ANT, U.FL, SMA options.
- UART Serial Port TTL level, speeds: 1200bps up to 921Kbps, even,odd parity.
- SPI port available.
- Low power consumption (<120mA transmitting,, 40mA idle mode)
- Ultra low power (~12ua) sleep mode with "instant on" (30ms) wakeup and attach.
- Wake on programmable timer, wake on UART receive character settings.
- Small-form factor 32 Pin DIP radio modem package (2mm pitch X 0.90" socket width)
- 6 General Purpose Input/Output Pins (4ma source/sink) controlled via remote commands.
- 8 sensor inputs (0 – 1.2VDC)

Environmental Conditions

Parameter	Value
Temperature Range (Operating)	-40 °C ~ +85 °C
Temperature Range (Storage)	-40 °C ~ +85 °C
Relative Humidity (Operating)	≤90%
Relative Humidity (Storage)	≤90%

Electrical Characteristics

Parameter	Min	Typ.	Max.	Unit
Supply Voltage VIN	4.0	5.0	12	VDC
Supply Voltage VDD	3.0	3.3	3.6	VDC
Supply Voltage (VBATT option)	2.0	3.0	3.3	VDC
Average power consumption				
Standby/Idle (default settings)	-	35	-	mA
Sleep	10	12	15	uA (micro)
Connected(idle, RX)		40		mA
Connected(TX)		110	180	mA

The power management unit turns off unused functions and switches between sleep and active modes. In sleep mode the real-time clock and sensor interface remain active, enabling the WiFly to wake up at any interval or when a specific condition is detected. This "instant-on" capability allows mobile devices to remain in low-power sleep mode until it is ready to transfer data. **The WiFly module can wake up, join a network, transmit data and go back to sleep in under 100 msec**.

This unique combination of low latency and low power makes it possible to run for over two years transmitting data every 5 minutes using just two standard AAA Alkaline batteries!

Radio Characteristics

Parameter	Specifications
Frequency	2402 ~ 2480MHz
Modulation	DSSS(CCK-11, CCK-5.5, DQPSK-2, DBPSK-1)
Channel intervals	5MHz
Channels	1 - 14
Transmission rate (over the air)	11/5.5/2/1Mbit
Receive sensitivity	-82 to -93dBm
Output level (Class1)	12dBm max.

Antenna configurations

Part Number	Description	Picture
RN-111B-R	Ultra low power WiFly GX module with RP-SMA connector	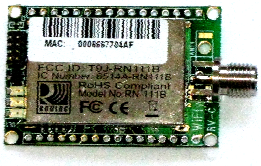
RN-111B-S	Ultra low power WiFly GX module with on board ceramic antenna	
RN-111B-E	Ultra low power WiFly GX module with SMA connector	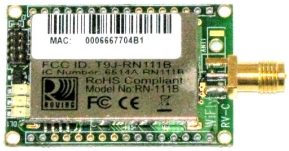
RN-111B-W	Ultra low power WiFly GX module with simple wire antenna	

Pin Description

Note: Any unused pins should be left floating (No Connect)

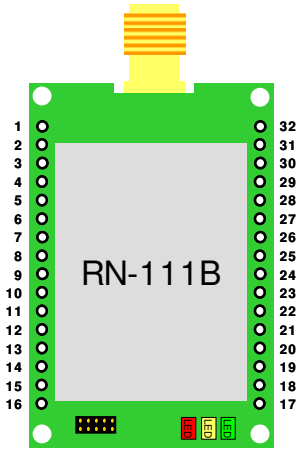

Top view

Pin	Name	Description	Default
1	PIO7	General Purpose IO	No Connect
2	VDD_SW	Switched sensor output power	No Connect
3	SENSE-5	Analog sensor input (1.2V)	
4	SENSE-6	Analog sensor input (1.2V)	
5	SENSE-7	Analog Sensor Input (1.2V)	
6	SENSE-8	Analog Sensor Input (1.2V)	
7	PIO6	Controls red LED	Input
8	PIO9	General purpose IO	Sets factory defaults
9	DEBUG_TX	2nd serial port	No Connect
10	DEBUG_RX	2nd serial port	No Connect
11	RESET	Active low with 10k built in pullup	
12	SHUTDOWN		No Connect
13	VIN	3.6-16VDC	
14	VREG	3.3V LDO output	
15	VBATT	Tie to VREG if USING VIN	Battery option
16	GND		
17	VDD	3.3V out-in	Power input
18	SP_MO	Spi port	No Connect
19	SP_CK	Spi port	No Connect
20	SP_CS	Spi port	No Connect
21	SP_MI	Spi port	No Connect
22	PIO5	Controls yellow LED	Connect/disconnect input
23	PIO4	Controls GREEN LED	Connection status output
24	RTS-PIO3	HW flow control output	TTL output
25	CTS-PIO2	Also can be used as PIO3	TTL input
26	RX	TTL Data IN	Input
27	TX	TTL Data Out	output
28	SENSE-4	Analog Sensor Input (1.2V)	Wake up GPIO
29	SENSE-3	Analog Sensor Input (1.2V)	Wake up GPIO
30	SENSE-2	Analog Sensor Input (1.2V)	Wake up GPIO
31	SENSE-1	Analog sensor input (3.3V tolerant)	Wake UP GPIO
32	GND		

Module Dimensions

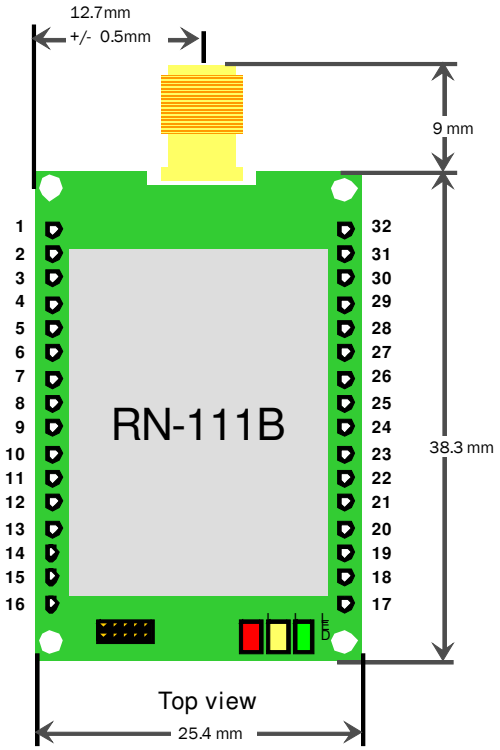

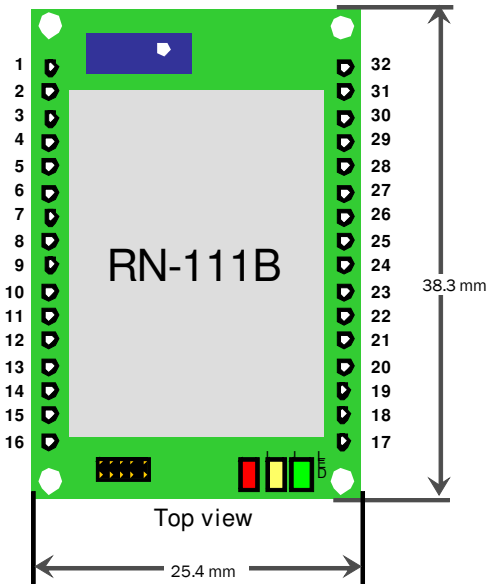

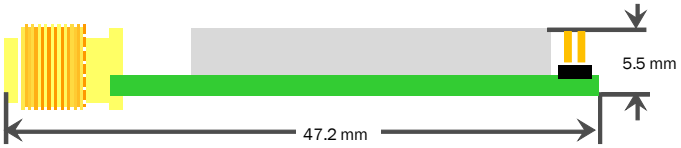

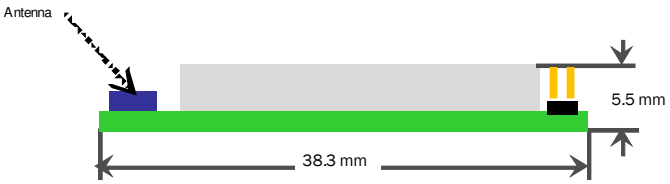

Design Concerns

1. ***Reset circuit***. Reset is active LOW, is optional and does not need to be connected. There is a built in voltage monitor that will pull Reset LOW (open drain FET) if the input voltage drops below 2.7VDC. If external reset is desired, use an OPEN DRAIN driver and do not drive the Reset pin to any voltage > 1.0 Vdc.

2. ***Powering the WiFly Module***. There are 3 options to power the RN-111b.
   - Supply 3.6 to 16VDC power to VIN (pin 13). Tie VREG (pin 14) to VBATT(pin 15).
   - Apply 3.3VDC regulated power to VDD (pin 17).
   - Apply battery = 2.0 to 3.0VDc to VBATT (pin 15).

   If VIN is powered, VREG will supply 3.3VDC output and can be used for other circuits, with a current limitation of 50 ma.

   Warning: Placing 5VDC or any voltage above 3.3Vdc into the VDD pins of the module will permanently damage the radio module. Be sure to use the VIN = pin 13 power pin for any power supplied that is > 3.3VDC.

3. ***Factory reset PIO9 (pin 8).*** It is a good idea to connect this pin to a switch, or jumper, or resistor, so it can be accessed. This pin can be used to reset the module to FACTORY DEFAULTS and is often critical in situations where the module has been mis-configured.

4. ***GPIO connections:*** Placing 3.3Vdc into the PIO's while they are set as outputs will permanently damage the radio modules. The failure mode is a short across GND and VCC. Use a 10KΩ resistor in series or a 10KΩ pull up resistor for input and output PIO's respectively.

5. ***Sensor connections.*** The Sensor inputs SENS1-8 are extremely sensitive to over voltage. Under no conditions should these pins be pulled high above 1.2VDC. Placing any voltage above this will permanently damage the radio module.

6. ***Connection status.*** PIO5 is available to drive an LED, and blinks at various speeds to indicate status. PIO2 is an output which directly reflects the connection state, it goes HIGH when connected, and LOW otherwise.

7. ***Using SPI bus for flash upgrade.*** While not required, this bus is very useful for configuring advanced parameters of the WiFly module. A 6pin header which can be implemented to gain access to this bus. A minimum-mode version could just use the SPI signals (4pins) and pickup ground and VCC from elsewhere on the design.

8. ***Minimizing Radio interference.*** When integrating the WiFly module with on board chip antenna be sure the area around the chip antenna end the module protrudes at least 5mm from the PCB and any metal enclosure. If this is not possible use the RN-111B-E (SMA jack) or RN-111B-R (Reverse polarity jack).

9. ***Connecting to the GPIO.*** Placing 3.3Vdc into the PIO's while they are set as outputs will permanently damage the radio. The failure mode is short across GND and VCC. Use a 10KO resistor is series or a 10KO pull up resistor for input and output PIO's respectively.
   - Make sure to connect a common ground when using the external TX, RX inputs on the 0 – 3.3Vdc
   - For a 3 wire DB-9 interface (tx, rx, gnd only) connect/short CTS to RTS, Factory default is hardware flow control enabled CTS and RTS connected.

- When using a 5.0Vdc Input, PIO's require a 10K ohm series resistor. PIO's are 0-3.3Vdc not 5 volt tolerant.

Compliance Information

CATEGORY	COUNTRY	STANDARD
RADIO	USA	FCC CFR47 Part 15 C, para 15.247
	FCC ID:	T9JRN111B
	EUROPE	EN 300 328-1
		EN 300 328-2 2.4GHz
	CANADA	IC RSS-210 low power comm. device
	IC Canada ID:	6514A-RN111B
EMC	USA	FCC CFR47 Part 15 subclass B
	EUROPE	EN 55022 Class B radiated
		EN61000-4-2 ESD immunity
		EN61000-4-3 radiated field
		EN61000-4-6 RF immunity
		EN61000-4-8 power magnetic immunity
SAFETY	USA	UL 60950-1
	EUROPE	EN 60950-1
	INTERNATIONAL	IEC 60950-1
	CANADA	CSA- 22.2
ENVIRONMENTAL	RoHS	RoHS compliant

Ordering Information

Part Number	Description
RN-111B-S	With chip antenna
RN-111B-E	With SMA jack
RN-111B-W	With wire Antenna
RN-111B-R	With reverse polarity SMA jack
RN-SMA-S	1" external antenna "Stuby"
RN-SMA-4	4" high performance antenna
RN-SMA-RA	4" high performance reverse polarity antenna
For other configurations, contact Roving Networks directly.	

Visit http://www.rovingnetworks.com for current pricing and a list of distributors carrying our products.

Copyright © 2009 Roving Networks. All rights reserved.

Roving Networks reserves the right to make corrections, modifications, and other changes to its products, documentation and services at any time. Customers should obtain the latest relevant information before placing orders and should verify that such information is current and complete.

Roving Networks assumes no liability for applications assistance or customer product design. Customers are responsible for their products and applications using Roving Networks components. To minimize the risks associated with customer products and applications, customers should provide adequate design and operating safeguards.

Roving Networks products are not authorized for use in safety-critical applications (such as life support) where a failure of the Roving Networks product would reasonably be expected to cause severe personal injury or death, unless officers of the parties have executed an agreement specifically governing such use.

All other trademarks are property of their respective owners.